Endress+Hauser Prosonic Flow G 300/500

AMA Innovation Award 2020

Endress+Hauser
People for Process Automation

Prosonic Flow G 300/500

- Sizes: 1"/DN 25 to 12"/DN 300
- Pressure: Cl. 150/PN 16 to Cl. 600/PN 100
- Volume flow uncertainty: 0.5% / 1%
- Corrected volume uncertainty : 1% / 1.5%
- Robust against wet gas conditions

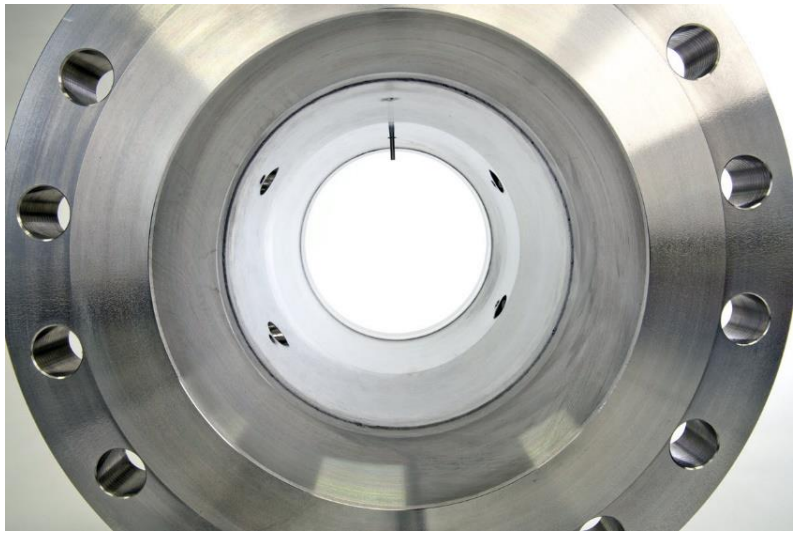

Prosonic Flow G 300/500: Redefines Ultrasonic Gas Measurement!

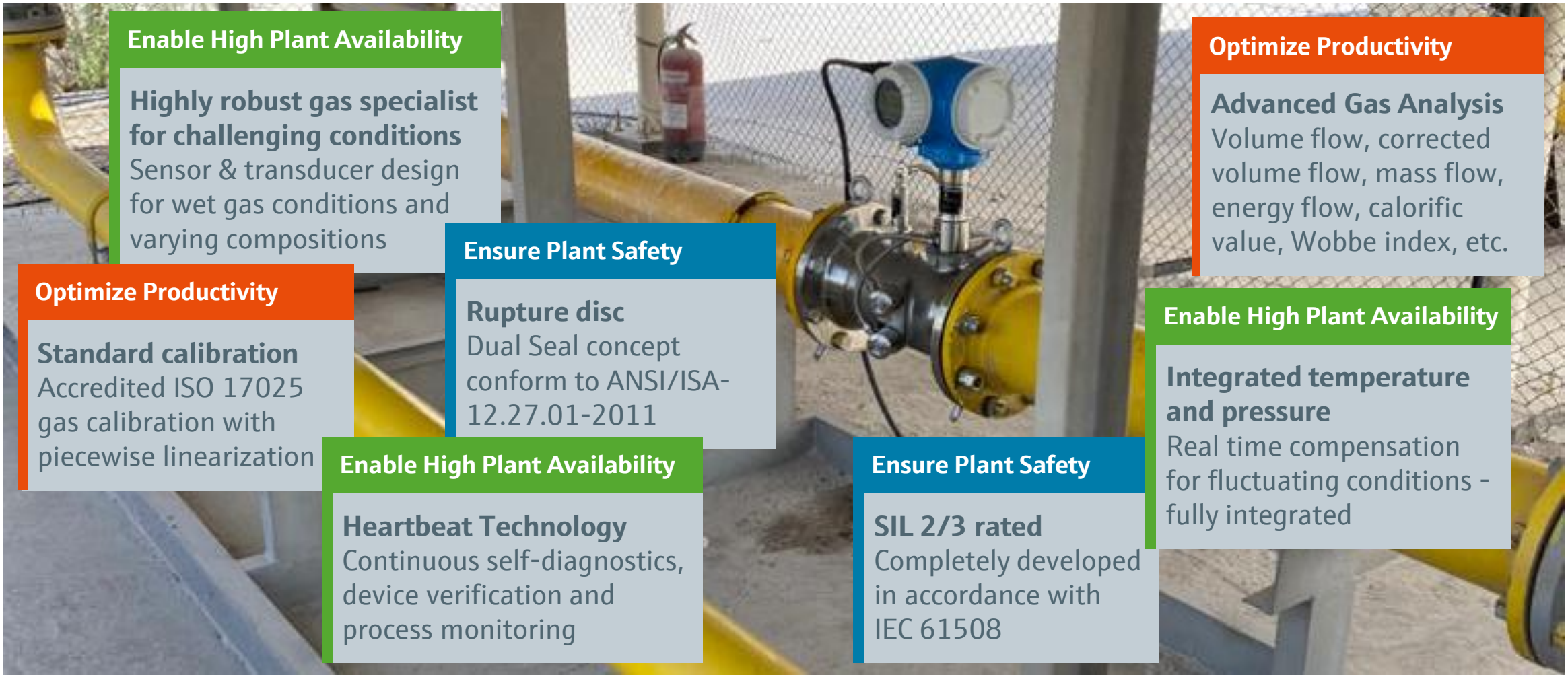

Enable High Plant Availability

Highly robust gas specialist for challenging conditions
Sensor & transducer design for wet gas conditions and varying compositions

Optimize Productivity

Standard calibration
Accredited ISO 17025 gas calibration with piecewise linearization

Ensure Plant Safety

Rupture disc
Dual Seal concept conform to ANSI/ISA-12.27.01-2011

Enable High Plant Availability

Heartbeat Technology
Continuous self-diagnostics, device verification and process monitoring

Ensure Plant Safety

SIL 2/3 rated
Completely developed in accordance with IEC 61508

Optimize Productivity

Advanced Gas Analysis
Volume flow, corrected volume flow, mass flow, energy flow, calorific value, Wobbe index, etc.

Enable High Plant Availability

Integrated temperature and pressure
Real time compensation for fluctuating conditions - fully integrated

Prosonic Flow G: Highly Robust Gas Specialist for Challenging Conditions

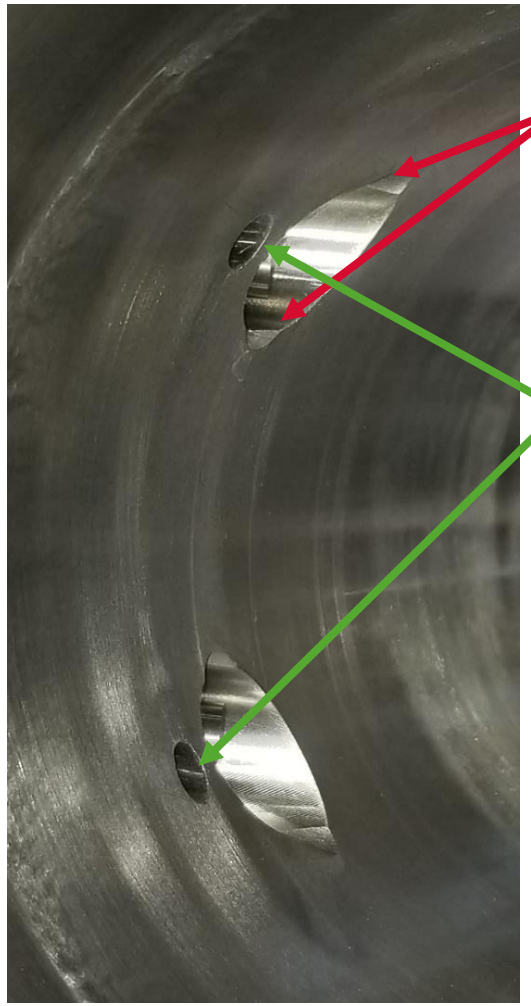

Sockets are specifically machined to encourage draining in horizontal installations i.e. angle is added

Drainage holes enable draining in case of vertical installation

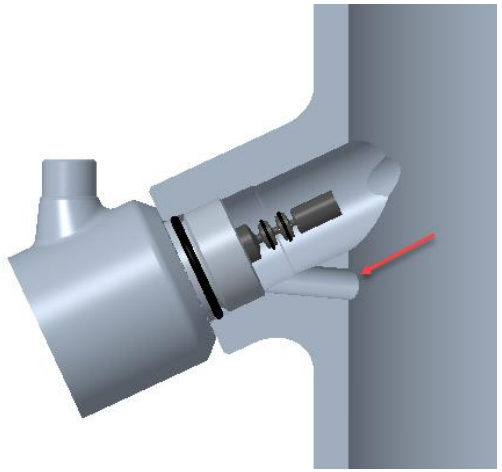

Innovative transducer design:

- Extremely effective sound transmission
- Titanium transducers
- 316L meter body
- Acoustical filter against pipe borne noise
- Large transducer to meter body gap to avoid acoustical short-circuit due to liquid collection

Prosonic Flow G: Integrated Temperature and Pressure Measurement

Pressure and temperature (p & T) are used to calculate normalized flow, the general customer preference:

- p & T seamlessly integrated to the electronics
- No outputs/inputs used for integration
- p & T are installed on the meter body: Pressure and leakage tested
- p & T also checked by Heartbeat Technology diagnostics

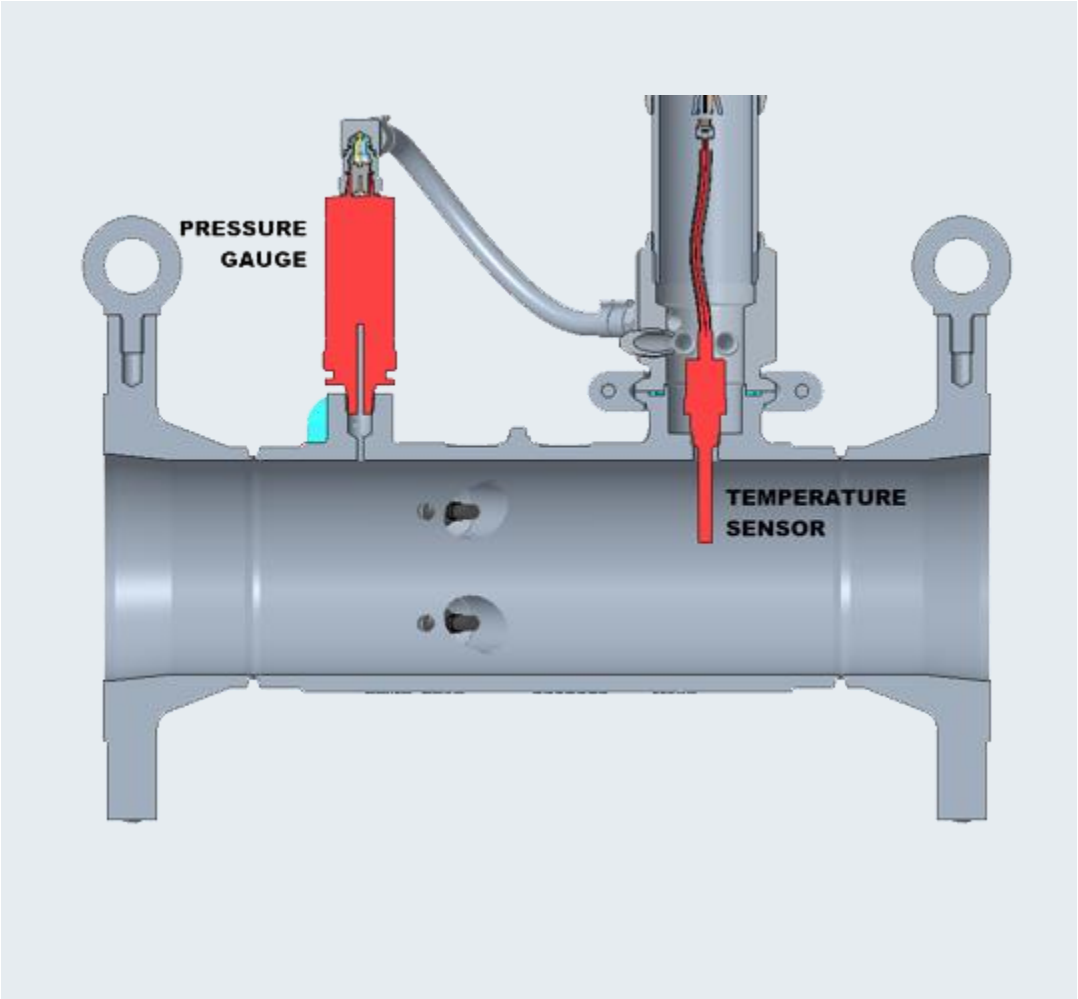

Prosonic Flow G: Advanced Gas Analysis

The Endress+Hauser Advanced Gas Analysis Package is superior in calculations using flow rate, speed of sound, pressure and temperature:

- Specialized algorithms for calculating additional parameters and measuring variables
- Energy flow measurement in natural gas, coal seam gas, coal bed methane and other gas mixtures are possible
- AGA NX19, AGA 5/ISO 6976, ISO 12213-2/3 and methane concentration calculations embedded
- Volume flow, corrected volume flow, mass flow, energy flow, calorific value, Wobbe index etc.

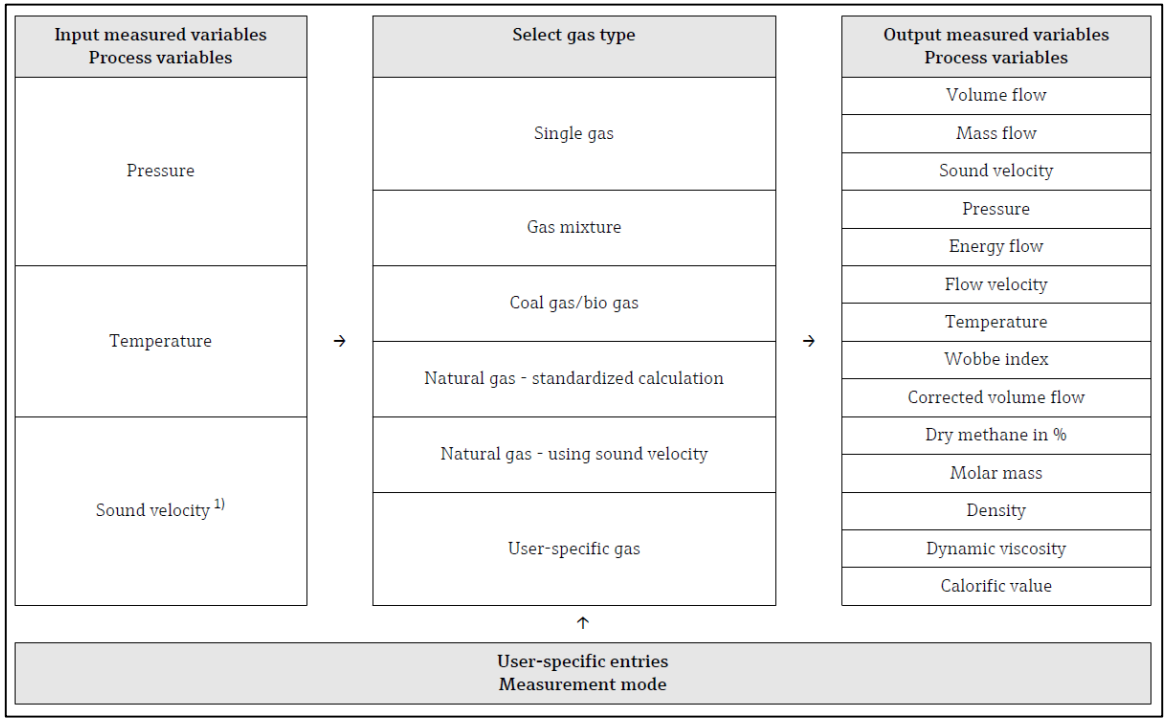

Prosonic Flow G: Heartbeat Technology

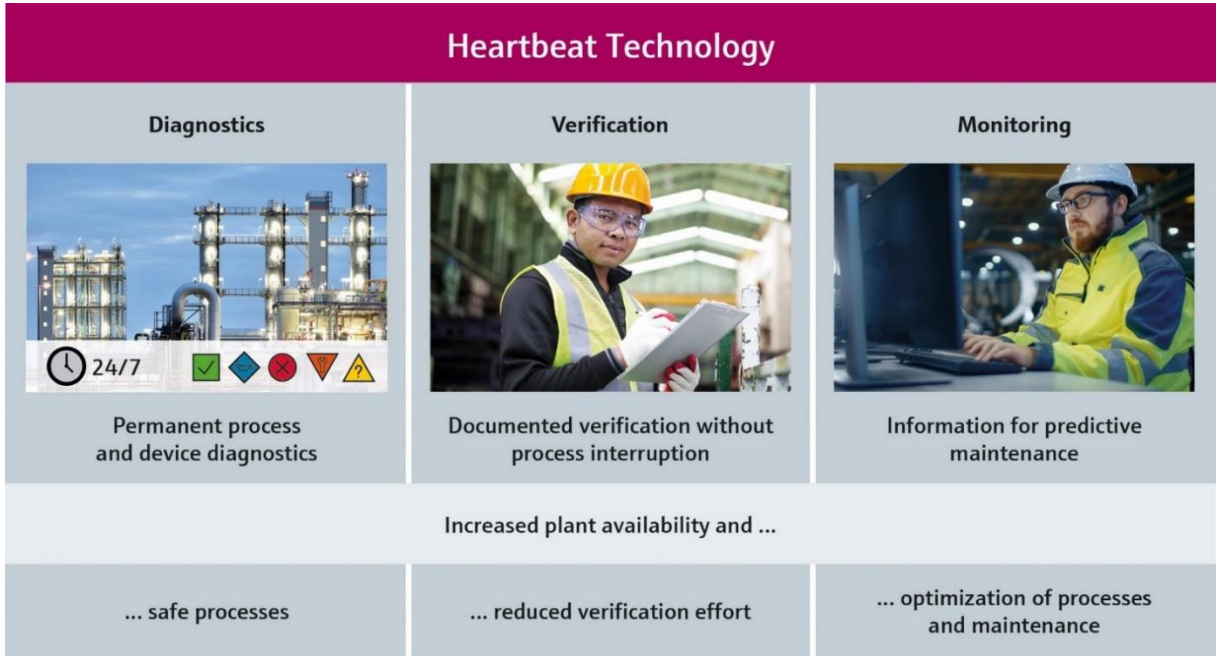

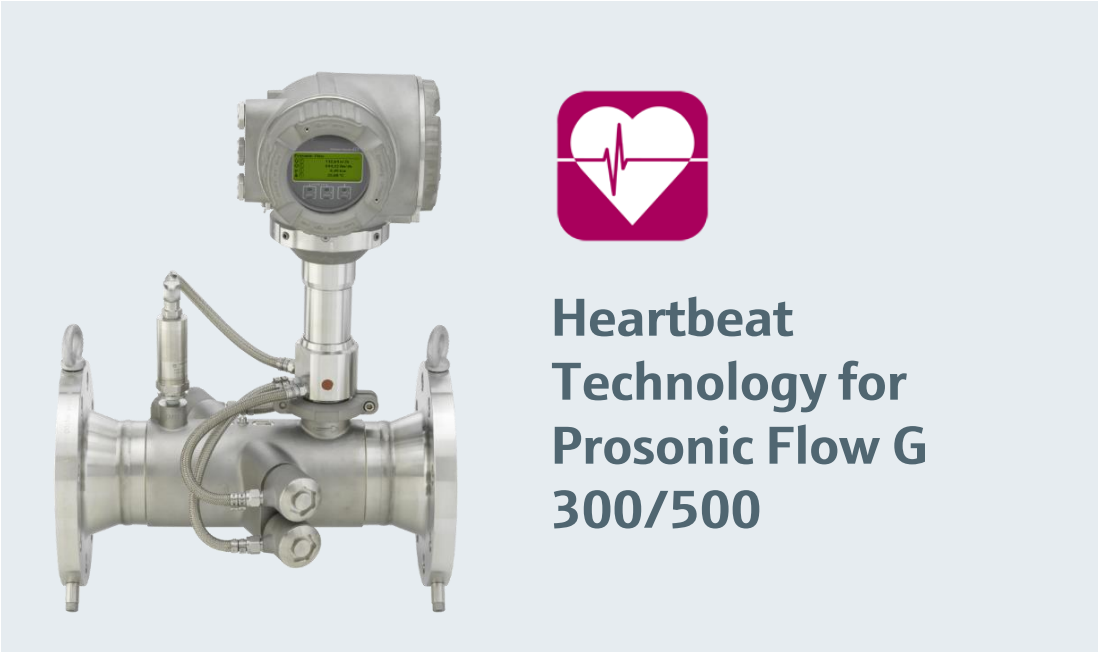

- Each test group has tolerances and limits used to generate the Heartbeat verification report.
- Additional variables are available for monitoring, for example: signal strength, acceptance rate, asymmetry, signal to noise ratio and turbulence.

Prosonic Flow G: SIL (Safety Integrity Level)

- First ultrasonic flowmeter completely developed in accordance with IEC 61508
- Safety relevant flow monitoring systems:
  - SIL 2 for single-channel service
  - SIL 3 for multi-channel service with homogeneous redundancy
- Manufacturer Declaration is integrated in our Functional Safety Manual

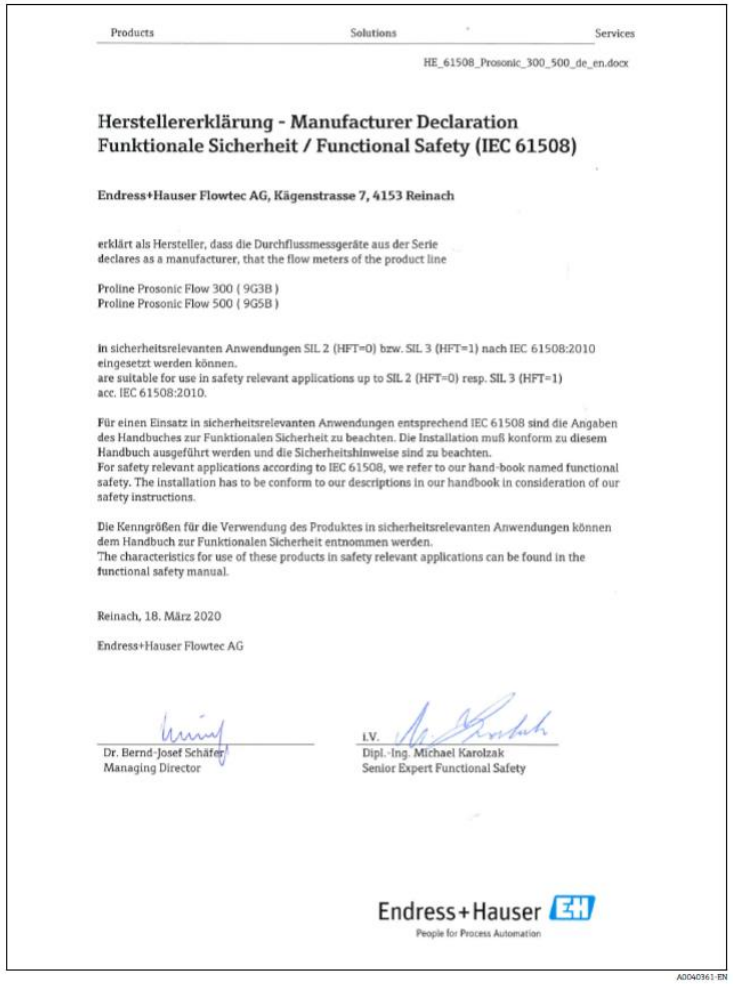

Products Solutions Services

HE_61508_Prosonic_300_500_de_en.docx

Herstellererklärung - Manufacturer Declaration
Funktionale Sicherheit / Functional Safety (IEC 61508)

Endress+Hauser Flowtec AG, Kägenstrasse 7, 4153 Reinach

erklärt als Hersteller, dass die Durchflussmessgeräte aus der Serie
declares as a manufacturer, that the flow meters of the product line

Proline Prosonic Flow 300 (9G3B)
Proline Prosonic Flow 500 (9G5B)

in sicherheitsrelevanten Anwendungen SIL 2 (HFT=0) bzw. SIL 3 (HFT=1) nach IEC 61508:2010 eingesetzt werden können.
are suitable for use in safety relevant applications up to SIL 2 (HFT=0) resp. SIL 3 (HFT=1) acc. IEC 61508:2010.

Für einen Einsatz in sicherheitsrelevanten Anwendungen entsprechend IEC 61508 sind die Angaben des Handbuches zur Funktionalen Sicherheit zu beachten. Die Installation muß konform zu diesem Handbuch ausgeführt werden und die Sicherheitshinweise sind zu beachten.
For safety relevant applications according to IEC 61508, we refer to our hand-book named functional safety. The installation has to be conform to our descriptions in our handbook in consideration of our safety instructions.

Die Kenngrößen für die Verwendung des Produktes in sicherheitsrelevanten Anwendungen können dem Handbuch zur Funktionalen Sicherheit entnommen werden.
The characteristics for use of these products in safety relevant applications can be found in the functional safety manual.

Reinach, 18. März 2020

Endress+Hauser Flowtec AG

Dr. Bernd-Josef Schäfer
Managing Director

i.V.
Dipl.-Ing. Michael Karolzak
Senior Expert Functional Safety

Endress+Hauser
People for Process Automation

A0040361-EN

Prosonic Flow G: Gas Calibration Facility

- Diameter range 50 to 300 (2 to 12")
- Flow range: 2…8700 m3/h
- Measurement uncertainty: ±0.25%
- Calibration pressure 350 mbar, closed loop system
- Master meters: ten different turbines and rotary pistons
- Transfer standards: two rotary pistons
- Accreditation according to ISO 17025 pending

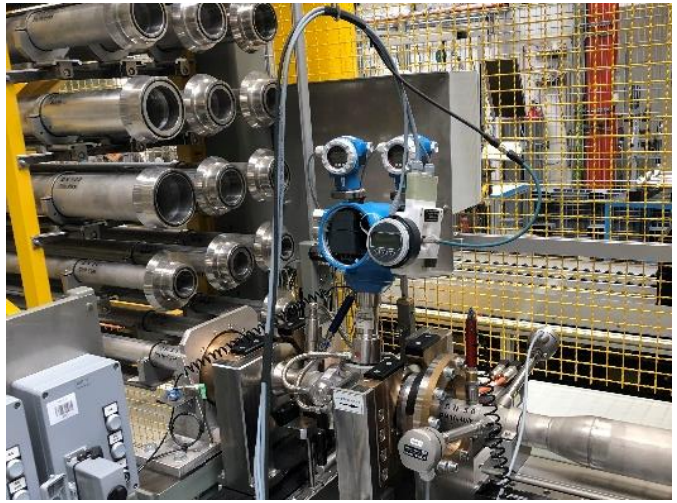

Prosonic Flow G: Natural Gas Application in Abu Dhabi

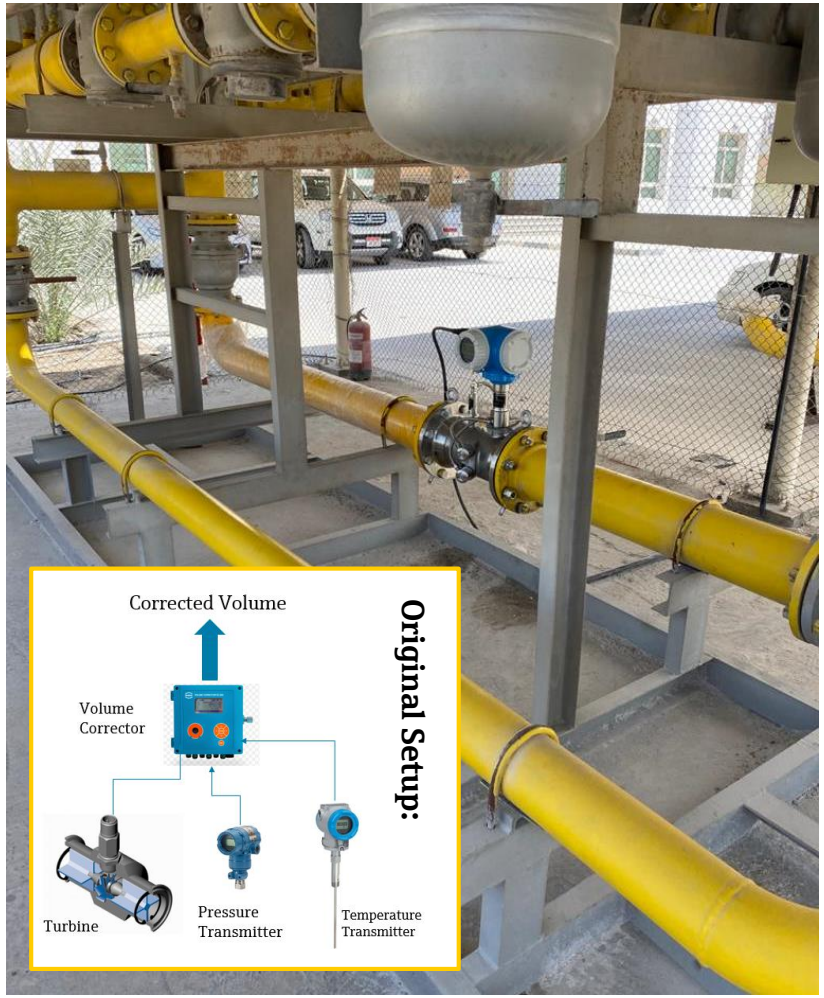

- High-performance process control: Real-time pressure- and temperature compensated measuring values
- Cost saving installation: Reduction of instrumentation components by a factor of four
- Maximum reliability even with wet gas: Sensor design insensitive to liquids
- Calorific value measurement – real time assessment of gas quality (energy)!
- Reliable and accurate energy based billing
- Full access to process and diagnostic information with WLAN without process interruption
- Integrated verification: Heartbeat Technology

Thank You for Your Attention

Prosonic Flow G 300/500